Service Parts Manual

GEM, HEM, and MFI R290 400lbs to 1500lbs Products

Revision Date: 10/1/2026

11100 E. 45th Avenue • Denver, CO 80239 • Phone: 1.866.PURE.ICE • www.iceomatic.com

TABLE OF CONTENTS

Cabinet 2

Refrigeration System: Air Cooled 4

Refrigeration System: Water Cooled 7

Water and Chute Systems 10

Control Box 12

Gearmotor 13

Evaporator 14

KGEMDISP 16

This parts list contains the service parts available for the following GEM/MFI/HEM ice makers.

MODEL LIST

Model	Model	Model
GEM0450A90	GEM0655A90	GEM0956A90
GEM0450W90	GEM0655W90	HEM0956A90
HEM0450A90	MFI0805A90	HEM0956W90
HEM0450W90	MFI0805W90	GEM0956W90
MFI0500A90	GEM0955A90	MFI1256A90
MFI0500W90	GEM0955W90	MFI1256W90
GEM0650A90	MFI1255A90	GEM1306A90
GEM0650R49	MFI1255W90	HEM1306A90
GEM0650W90		MFI1506A90
HEM0650A90		
HEM0650W90		
MFI0800A90		
MFI0800W90		

MODEL NOMENCLATURE

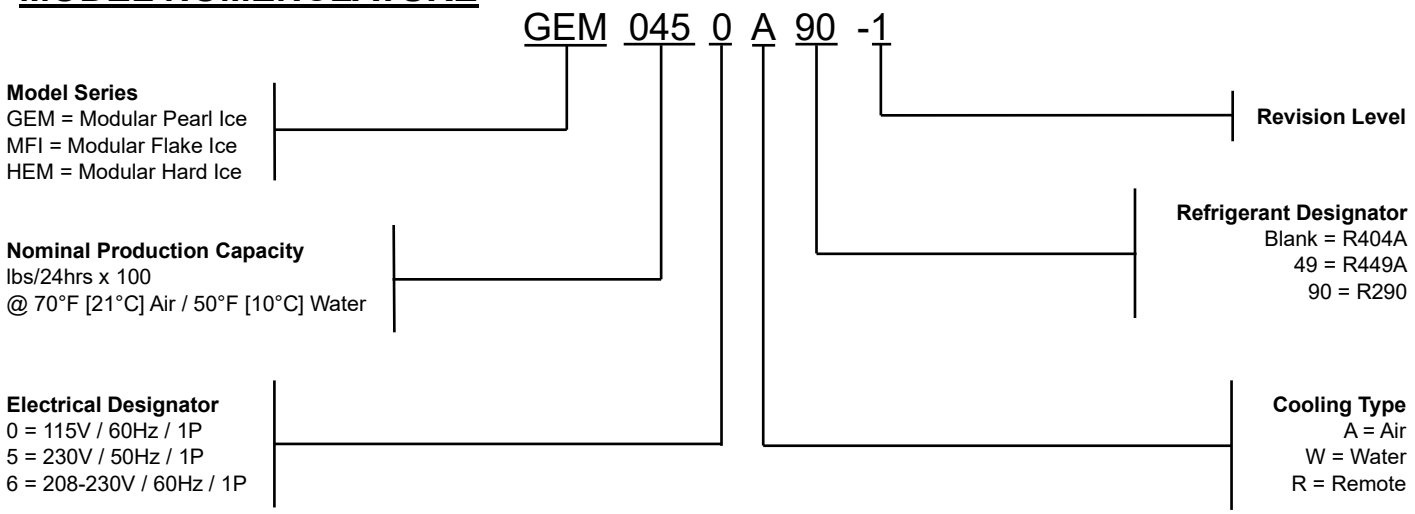

Check the model number on the data plate and refer to the correct listing for the specific component.

Check carefully that the correct part is identified and ordered.

CABINET

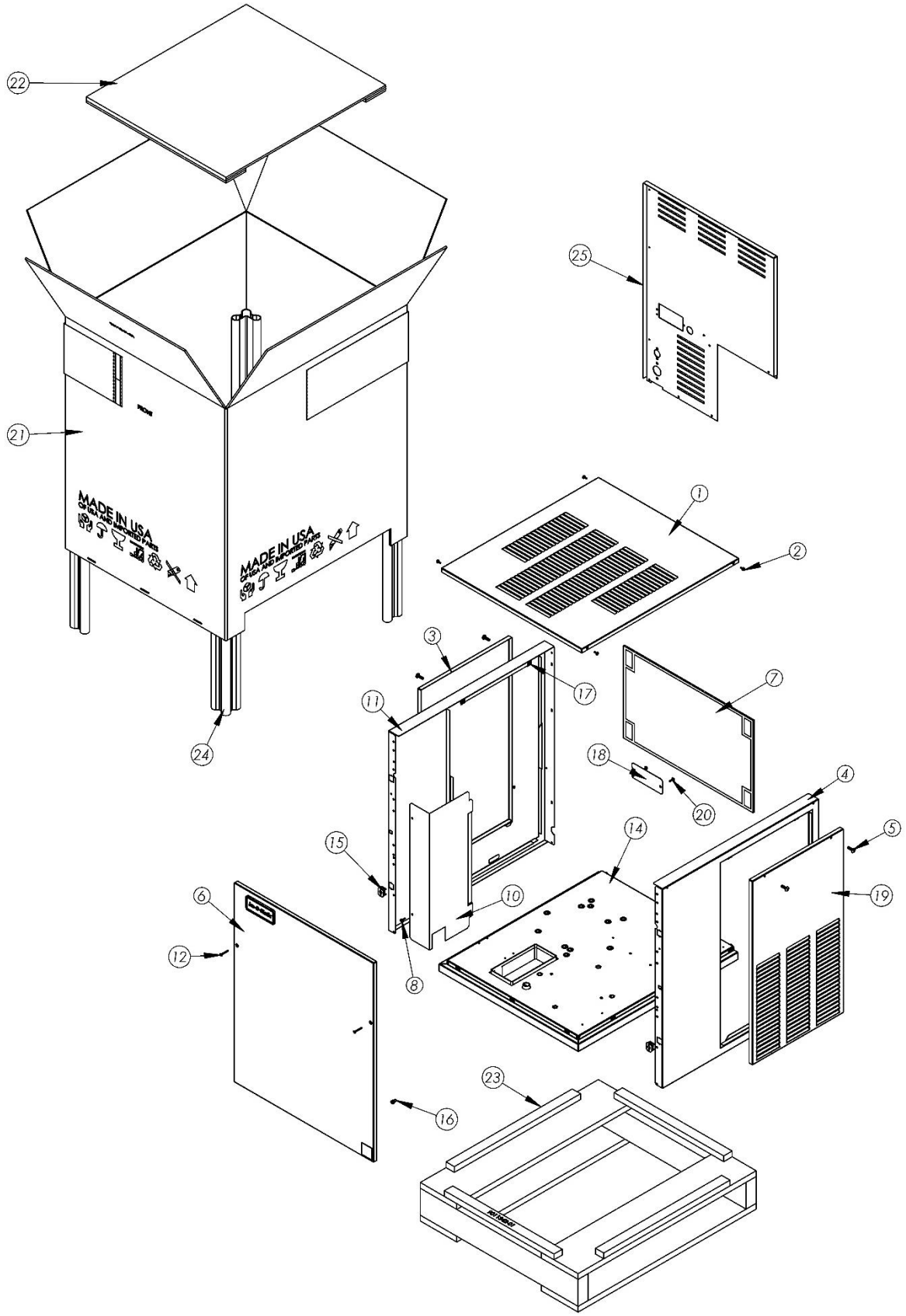
22
25
21
MADE IN USA
MADE IN USA
1
2
3
17
7
11
24
18
4
20
5
14
15
19
6
10
12
8
23
16

Cabinet

Item No.	Model Family			Desciption
	GEM****A MFI****A HEM****A	GEM1306A MFI1506A HEM1306A	GEM****W MFI****W HEM****W	
1	3022064-01	3022064-01	3021951-01	Panel, Top
2	9031046-27P	9031046-27P	9031046-27P	Screw (10 pack)
3	3021953-01	3021953-01	3021953-01	Panel, Service (Both sides for water cooled)
4	3021952-01	3021952-01	3021952-01	Panel, End, Right
5	9031113-14P	9031113-14P	9031113-14P	Screw (10 pack)
6	2031519-01	2031519-01	2031519-01	Front Panel
7	9131583-01	9131574-01	N/A	Air Filter
8	9031046-03P	9031046-03P	9031046-03P	Screw (10 pack)
9				
10	3013391-01	3013391-01	3013391-01	Control Box Cover
11	3021950-01	3021950-01	3021950-01	Panel, End, Left
12	9031045-07P	9031045-07P	9031045-07P	Screw (10 pack)
13				
14	2021861-01	2021861-01	2021861-01	Base
15	9021112-01	9021112-01	9021112-01	Cabinet Catch
16	9021121-01	9021121-01	9021121-01	Strike
17	9031035-04	9031035-04	9031035-04	U-Nut
18	3013674-01	3013674-01	3013674-01	Junction Box Cover
19	3022063-01	3022063-01	N/A	Panel, Service, Louvered
20	9031046-01P	9031046-01P	9031046-01P	Screw (10 pack)
21	9011341-01	9011341-01	9011341-01	Carton
22	9011343-01	9011343-01	9011343-01	Top Pad
23	9011342-01	9011342-01	9011342-01	Skid
24	9011320-13	9011320-13	9011320-13	Corner Post (4 Required)
25	N/A	N/A	3013981-01	Rear Panel (Water Cooled)

REFRIGERATION SYSTEM: AIR COOLED

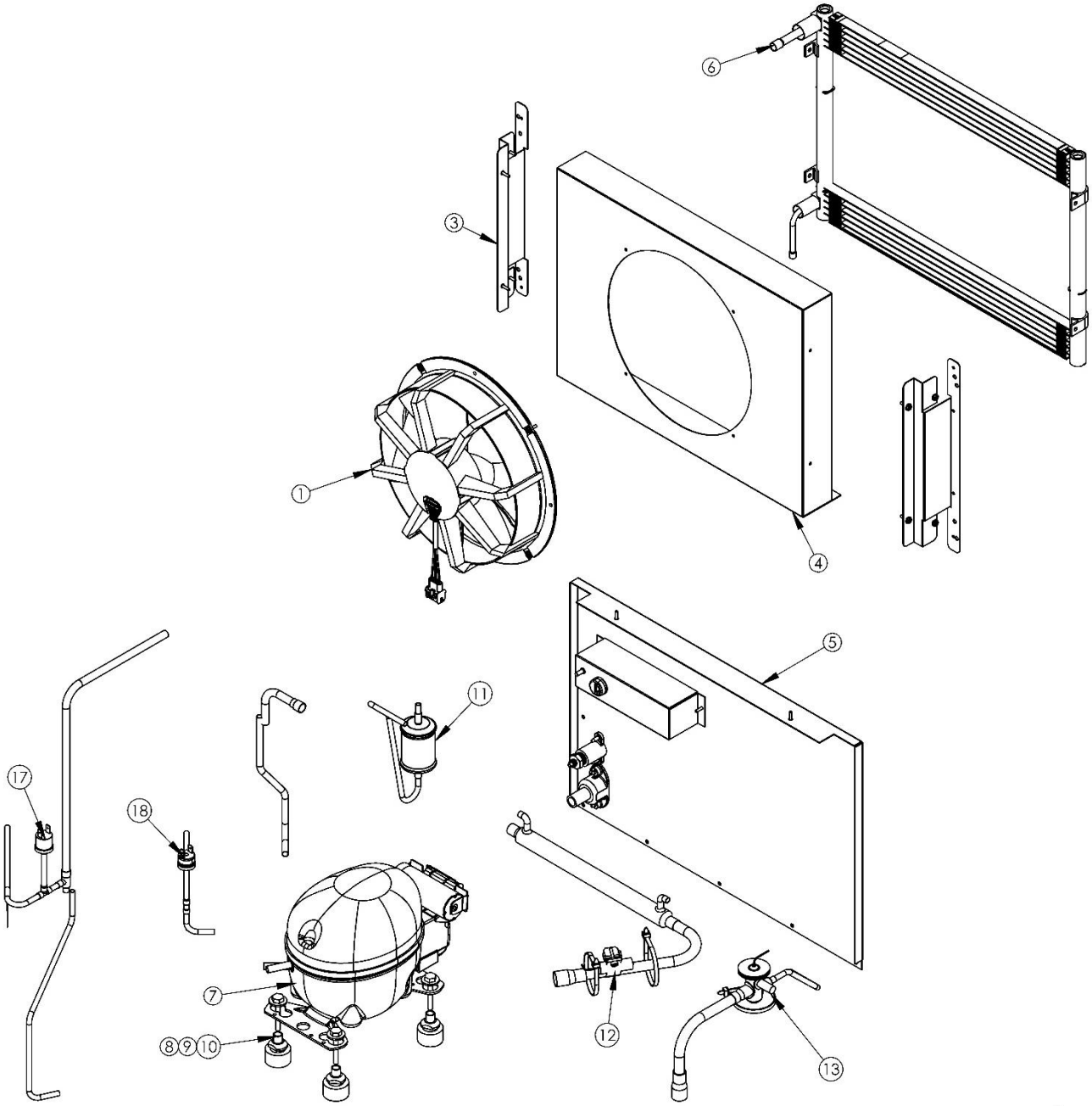

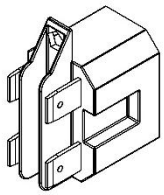

Pin To QC Adapter
9181195-01

REFRIGERATION SYSTEM: AIR COOLED

Item No.	Model Family				Desciption
	GEM0450A MFI0500A HEM0450A		GEM0650A MFI0800A HEM0650A	GEM0655A MFI0805A	
1	9161155-01		9161155-01	9161155-02	Fan Motor
2					
3	3013866-01		3013866-01	3013866-01	Fan Shroud Bracket
4	3013902-01		3013902-01	3013902-01	Fan Shroud
5	3013903-01		3013903-01	3013903-01	Lower Rear Panel
6	9141174-01		9141174-01	9141174-01	Condenser
7	9181211-101		9181212-101	9141214-101	Compressor Kit
8	9031001-41P		9031001-41P	9031001-41P	Compressor Bolt (10 pack)
9	N/A		9181002-09P	9181002-09P	Compressor Grommet (10 pack)
10	N/A		9181002-02	9181002-02	Compressor Sleeve
11	9151163-01		9151163-01	9151163-01	Filter Drier
12	9131143-01		9131143-01	9131143-01	Insulation, Bulb
13	9151217-101		9151217-101	9151217-101	Expansion Valve
14					
15					
16					
17	9041120-01		9041120-01	9041120-01	High Pressure Switch
18	9041102-01		9041102-01	9041102-01	Low Pressure Switch
	Compressor Starting Components (Included In Comp Kit)				
	9181003-60		9181003-66	9181003-52	Start Capacitor
	-		9181009-13	9181009-26	Run Capacitor
	9181004-36		9181010-42	9181010-27	Compressor Relay
	9181169-03		Internal	Internal	Overload
	9181195-01 (As Required)				Pin to QC Adapter

REFRIGERATION SYSTEM: AIR COOLED

Item No.	Model Family				Desciption
	GEM0955A MFI1255A	GEM0956A MFI1256A HEM0956A		GEM1306A MFI1506A HEM1306A	
1	9161155-02	9161155-02		9161155-02	Fan Motor
2					
3	3013866-01	3013866-01		3013929-01	Fan Shroud Bracket
4	3013902-01	3013902-01		3013987-01	Fan Shroud
5	3013903-01	3013903-01		3013903-02	Lower Rear Panel
6	9141174-01	9141174-01		9141181-01	Condenser
7	9181221-101	9181208-101		9181213-101	Compressor Kit
8	9031001-41P	9031001-41P		9031001-41P	Compressor Bolt (10 pack)
9	9181002-09P	9181002-09P		9181002-09P	Compressor Grommet (10 pack)
10	9181002-02	9181002-02		9181002-02	Compressor Sleeve
11	9151163-01	9151163-01		9151163-01	Filter Drier
12	9131143-01	9131143-01		9131143-01	Insulation, Bulb
13	9151217-101	9151217-101		9151217-101	Expansion Valve
14					
15					
16					
17	9041120-01	9041120-01		9041120-01	High Pressure Switch
18	9041102-01	9041102-01		9041102-01	Low Pressure Switch
	Compressor Starting Components (Included In Comp Kit)				
	9181003-54	9181003-52		9181003-52	Start Capacitor
	9181009-28	9181009-30		9181009-17	Run Capacitor
	9181010-40	9181010-41		9181010-28	Compressor Relay
	Internal	Internal		Internal	Overload
	9181195-01 (As Required)				Pin to QC Adapter

REFRIGERATION SYSTEM: WATER COOLED

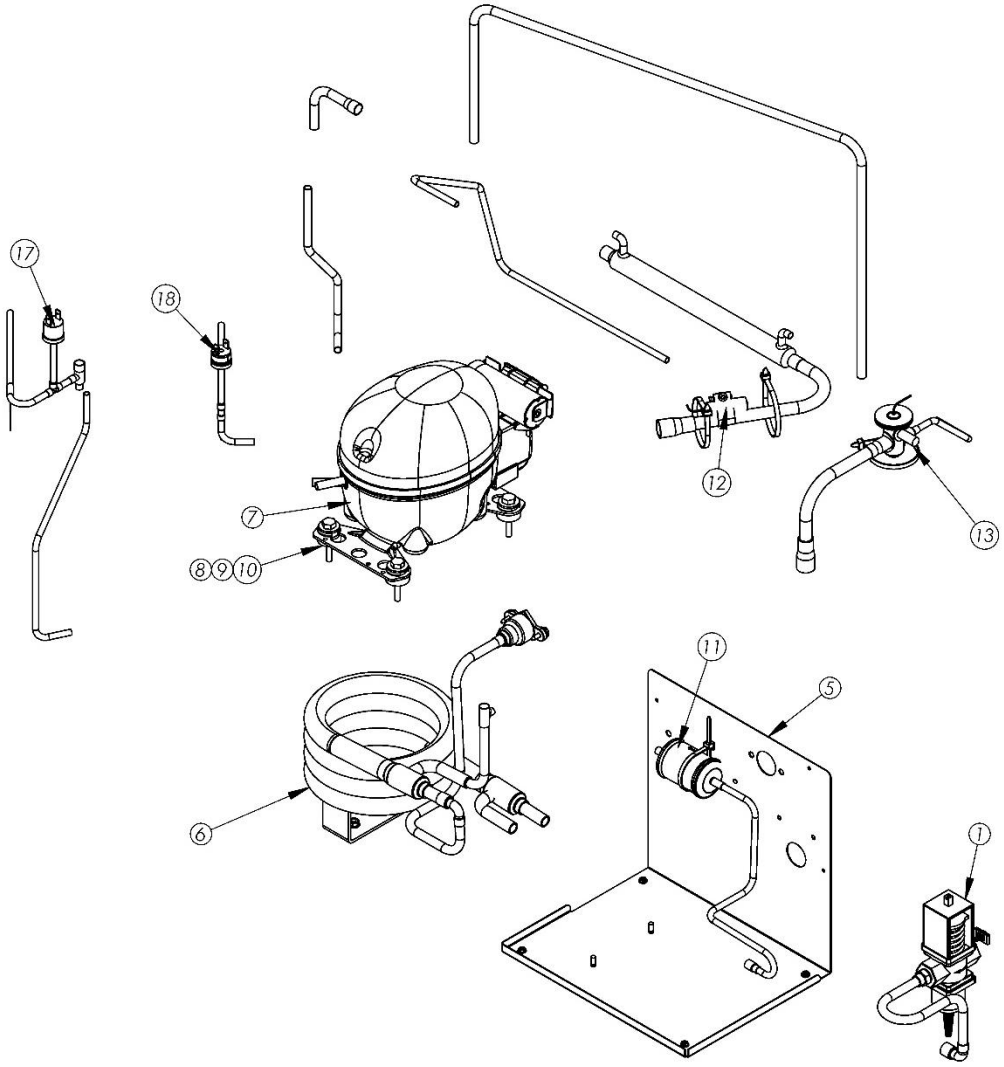

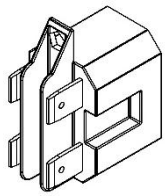

Pin To QC Adapter
9181195-01

REFRIGERATION SYSTEM: WATER COOLED

Item No.	Model Family				Desciption
	GEM0450W MFI0500W HEM0450W		GEM0650W MFI0800W HEM0650W	GEM0655W MFI0805W	
1	9041059-02		9041059-02	9041059-02	Water Regulator
2					
3					
4					
5	2021863-01S		2021863-01S	2021863-01S	Condenser Bracket
6	9141178-01		9141178-01	9141178-01	Condenser
7	9181211-101		9181212-101	9141214-101	Compressor Kit
8	9031001-41P		9031001-41P	9031001-41P	Compressor Bolt (10 pack)
9	N/A		9181002-09P	9181002-09P	Compressor Grommet (10 pack)
10	N/A		9181002-02	9181002-02	Compressor Sleeve
11	9151163-01		9151163-01	9151163-01	Filter Drier
12	9131143-01		9131143-01	9131143-01	Insulation, Bulb
13	9151217-101		9151217-101	9151217-101	Expansion Valve
14					
15					
16					
17	9041120-01		9041120-01	9041120-01	High Pressure Switch
18	9041102-01		9041102-01	9041102-01	Low Pressure Switch
	Compressor Starting Components (Included In Comp Kit)				
	9181003-60		9181003-66	9181003-52	Start Capacitor
	-		9181009-13	9181009-26	Run Capacitor
	9181004-36		9181010-42	9181010-27	Compressor Relay
	9181169-03		Internal	Internal	Overload
	9181195-01 (As Required)				Pin to QC Adapter

REFRIGERATION SYSTEM: WATER COOLED

Item No.	Model Family				Desciption
		GEM0956W MFI1256W HEM956W			
1		9041059-02			Water Regulator
2					
3					
4					
5		2021863-01S			Condenser Bracket
6		9141178-01			Condenser
7		9181208-101			Compressor Kit
8		9031001-41P			Compressor Bolt (10 pack)
9		9181002-09P			Compressor Grommet (10 pack)
10		9181002-02			Compressor Sleeve
11		9151163-01			Filter Drier
12		9131143-01			Insulation, Bulb
13		9151217-101			Expansion Valve
14					
15					
16					
17		9041120-01			High Pressure Switch
18		9041102-01			Low Pressure Switch
	Compressor Starting Components (Included In Comp Kit)				
		9181003-52			Start Capacitor
		9181009-30			Run Capacitor
		9181010-41			Compressor Relay
		Internal			Overload
	9181195-01 (As Required)				Pin to QC Adapter

WATER AND CHUTE SYSTEMS

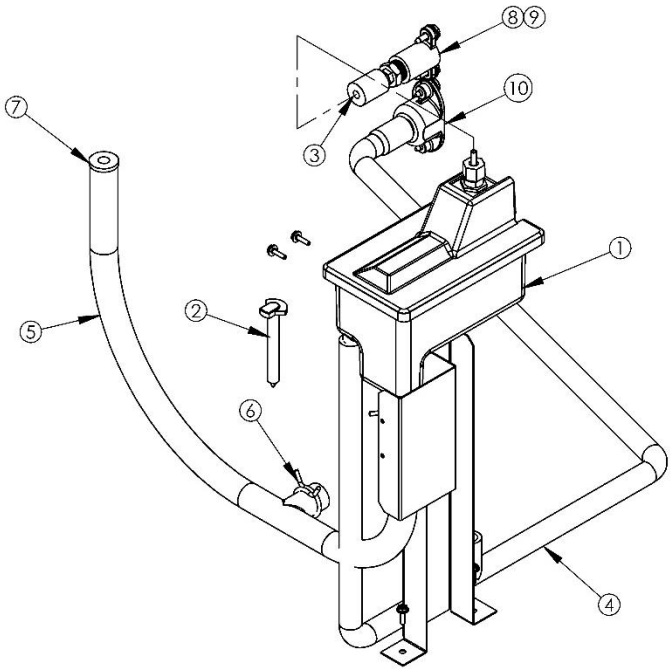

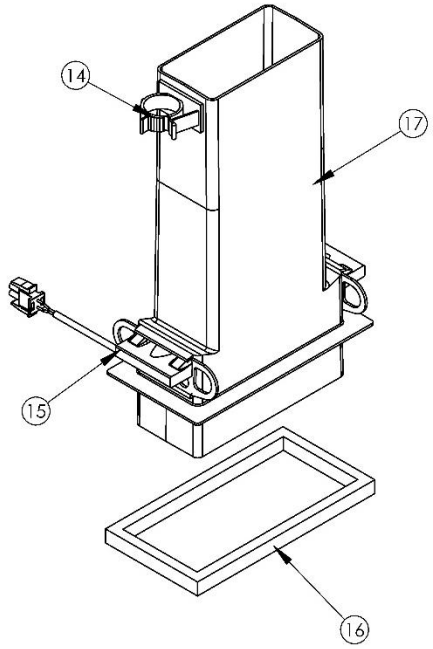

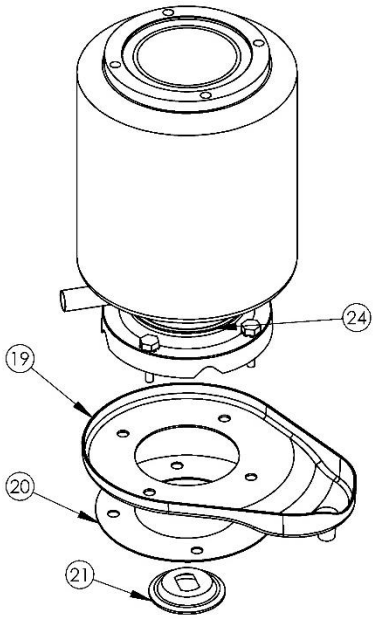

WATER AND CHUTE SYSTEMS

Item No.	Model Family				Desciption
	GEM/MFI 450 to 800	GEM/MFI 950 to 1500	HEM 450 to 800	HEM 950 to 1500	
1	9131481-01	9131481-01	9131481-01	9131481-01	Float Assembly
2	9101334-01	9101334-01	9101334-01	9101334-01	Conductivity Probe
3	3032898-40	3032898-40	3032898-40	3032898-40	1/4" OD Polyethelene Tube (40")
4	9051606-02	9051606-02	9051606-02	9051606-02	Tube, Water Drain
5	9051619-01	9051619-01	9051619-01	9051619-01	Tube, Evaporator Water Inlet
6	9021113-01	9021113-01	9021113-01	9021113-01	Clamp
7	9051610-01	9051610-01	9051610-01	9051610-01	Plug
8	9091074-01	9091074-01	9091074-01	9091074-01	Drop Adapter Fitting
9	9091083-01	9091083-01	9091083-01	9091083-01	Water Inlet Fitting
10	9091140-01	9091140-01	9091140-01	9091140-01	Drain Fitting
14	9021116-01	9021116-01	9021116-01	9021116-01	Clip, Hose
15	1051166-01	1051166-01	1051166-01	1051166-01	Bin Control Assembly (set of 2)
16	9051614-01	9051614-01	9051614-01	9051614-01	Gasket, Ice Chute
17	9051601-01	9051601-02	9051601-03	9051601-04	Ice Chute, Lower
18					
19	9051632-01	9051632-01	9051632-01	9051632-01	Drip Pan
20	9131486-01	9131486-01	9131486-01	9131486-01	Drip Pan Gasket
21	9051611-01	9051611-01	9051611-01	9051611-01	Water Shed
22					
23					
24	9021140-01	9021140-01	9021140-01	9021140-01	Insulation, Evaporator Collar Bottom

CONTROL BOX

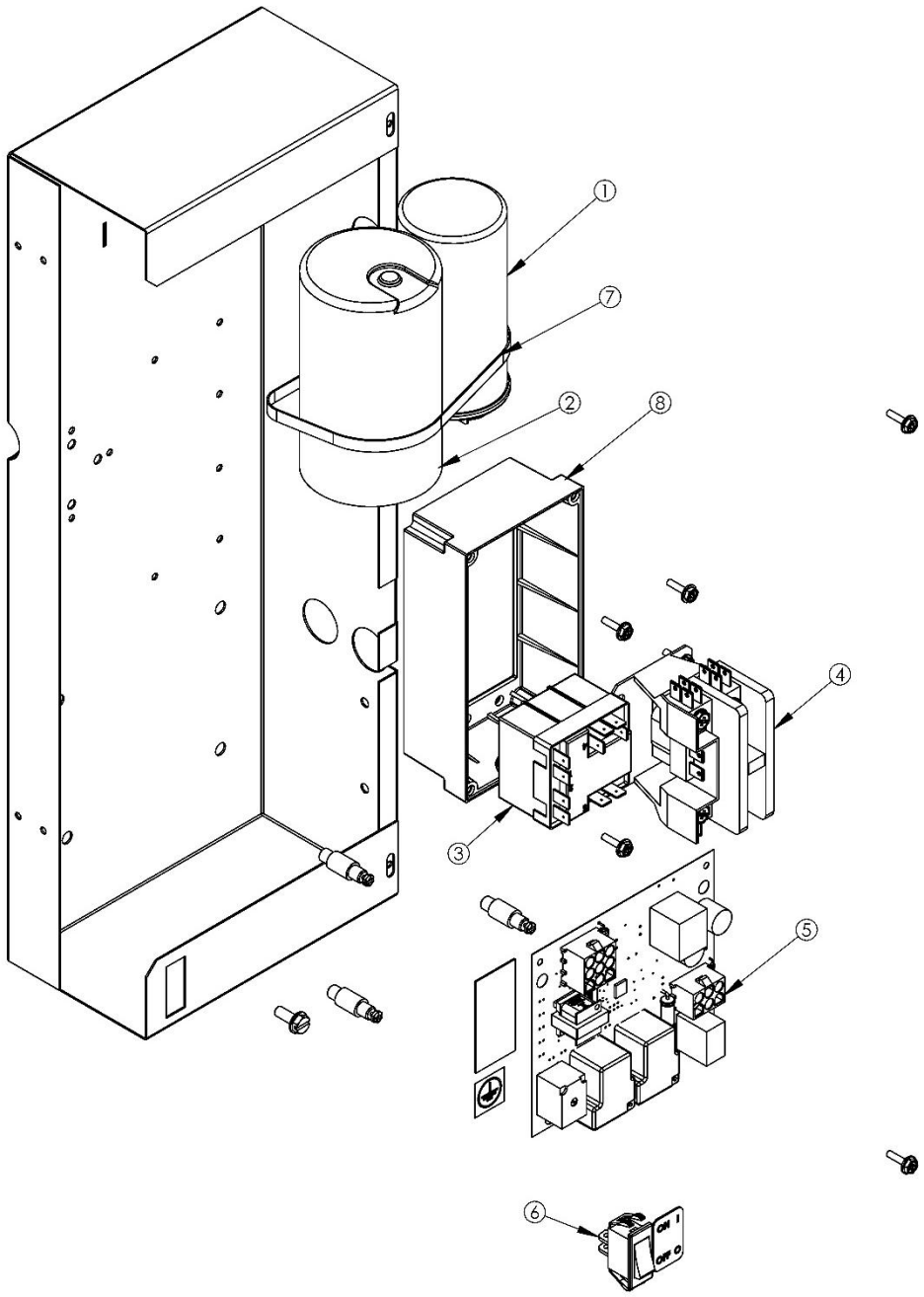

Item No.	Model Family			Desciption
	GEM***0* MFI***0* HEM***0*	GEM***5* MFI***5* HEM***5*	GEM***6* MFI***6* HEM***6*	
1	See Ref. Sys.	See Ref. Sys.	See Ref. Sys.	Run Capacitor (pg. 6)
2	See Ref. Sys.	See Ref. Sys.	See Ref. Sys.	Start Capacitor (pg. 6)
3	See Ref. Sys.	See Ref. Sys.	See Ref. Sys.	Compressor Relay (pg. 6)
4	9101002-07	9101002-06	9101002-06	Contactor
5	9101335-01	9101335-01	9101335-01	Control Board
6	9101507-01	9101507-01	9101507-01	Switch
7	9021096-01	9021096-01	9021096-01	Cable Tie, Metal
8	9051881-01	9051881-01	9051881-01	Contactor Box, Lower
	9051881-02	9051881-02	9051881-02	Contactor Box, Upper (not shown)

GEARMOTOR

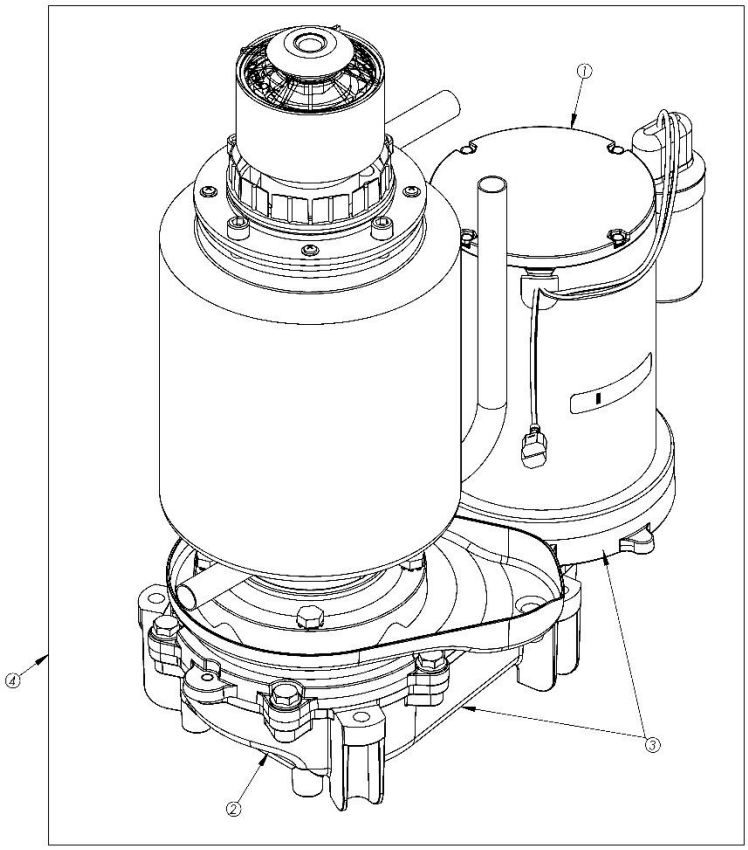

Item No.	Model Family						Desciption
	GEM0450* GEM0650*	MFI0500* MFI0800*	GEM0655*	MFI0805*	GEM0955* GEM0956* GEM1306*	MFI1255* MFI1256* MFI1506*	
1	NA	NA	NA	NA	NA	NA	Motor Only
2	NA	NA	NA	NA	NA	NA	Gearbox Only
3	9161157-01S	9161157-01S	9161156-01S	9161156-01S	9161156-01S	9161156-01S	Motor and Gearbox
4	2081048-02S	2081048-01S	2081048-04S	2081048-03S	2081048-06S	2081048-05S	Complete Assembly
	6051073-01						Gearbox Lubricant (16oz)
	9131560-01						Grease Needle
	6051062-01						Upper Bearing Grease

Item No.	Model Family						Desciption
	HEM0450* HEM0650*				HEM0956* HEM1306*		
1	NA				NA		Motor Only
2	NA				NA		Gearbox Only
3	9161157-01S				9161156-01S		Motor and Gearbox
4	2081048-07S				2081048-09S		Complete Assembly
	6051073-01						Gearbox Lubricant (16oz)
	9131560-01						Grease Needle
	6051062-01						Upper Bearing Grease

EVAPORATOR

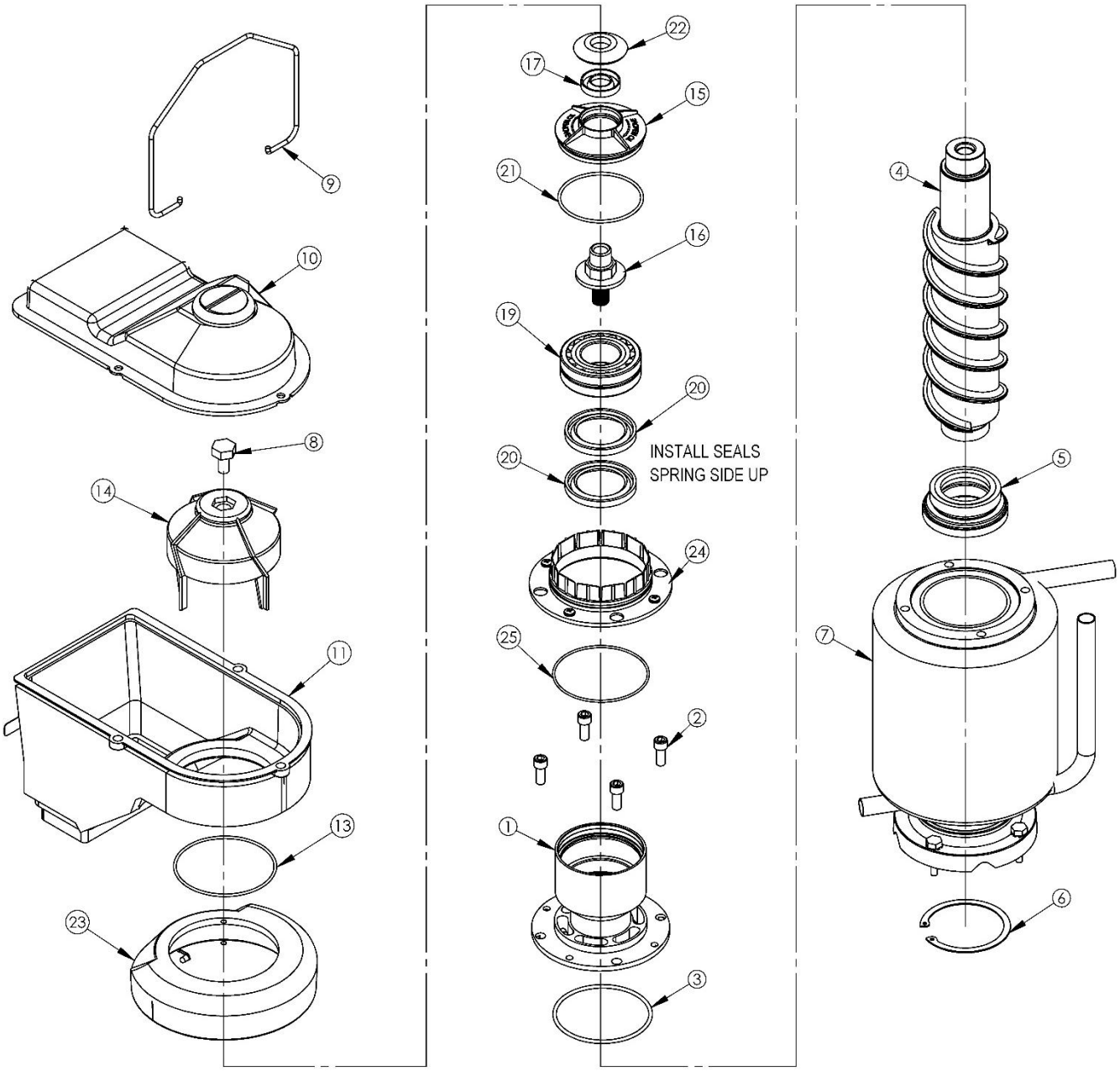

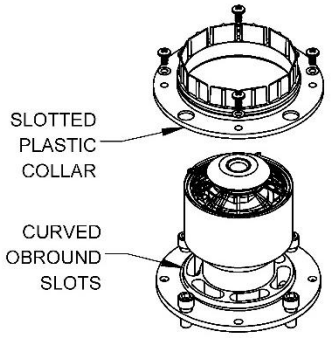

MFI (FLAKER) HEAD ASSEMBLY

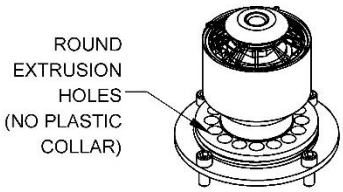

GEM (PEARL) HEAD ASSEMBLY

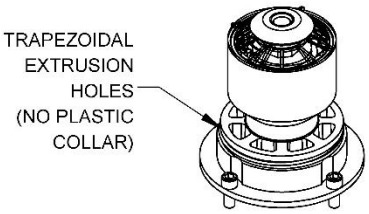

HEM (HARD) HEAD ASSEMBLY

EVAPORATOR

Item No.	Model Family						Desciption
	GEM045** GEM065**	GEM095** GEM130**	MFI050** MFI080**	MFI125** MFI150**	HEM045** HEM065**	HEM095** HEM130**	
1	1051220-01A	1051220-01A	1051221-01A	1051221-01A	1051260-01	1051260-01	Breaker (Includes items 3, 15, 17, 19, 21, 22, 25)
2	9031169-02P	9031169-02P	9031169-02P	9031169-02P	9031169-02P	9031169-02P	Socket Head Screw (10 pack)
3	9051636-01	9051636-01	9051636-01	9051636-01	9051636-01	9051636-01	O-Ring
4	9151167-01	9151196-01	9151167-01	9151196-01	9151222-01	9151210-01	Auger
5	9021142-01	9021142-01	9021142-01	9021142-01	9021142-01	9021142-01	Water Seal
6	9021141-01	9021141-01	9021141-01	9021141-01	9021141-01	9021141-01	Ring, Water Seal
7	9151170-01	9151169-01	9151170-01	9151169-01	9151170-01	9151169-01	Evaporator (Barrel Only)
8	9031001-44	9031001-44	9031001-44	9031001-44	9031001-44	9031001-44	Hex Cap Screw
9	9131494-01	9131494-01	9131494-01	9131494-01	9131587-01	9131587-01	Bail Clamp
10	9051602-01	9051602-01	9051602-01	9051602-01	9051602-01	9051602-01	Ice Chute Cover
11	9131495-01	9131495-01	9131495-01	9131495-01	9131495-01	9131495-01	Ice Chute Body with Insulation
12							
13	9051634-01	9051634-01	9051634-01	9051634-01	9051634-01	9051634-01	O-Ring
14	9051603-01	9051603-01	9051603-01	9051603-01	9051603-01	9051603-01	Ice Sweep
15	9151171-01	9151171-01	9151171-01	9151171-01	9151171-01	9151171-01	Breaker Cover
16	9151168-01	9151168-01	9151168-01	9151168-01	9151168-01	9151168-01	Auger Stud
17	9121054-01	9121054-01	9121054-01	9121054-01	9121054-01	9121054-01	Lip Seal
18	9031001-42	9031001-42	9031001-42	9031001-42	9031001-42	9031001-42	O-Ring
19	9121052-01A	9121052-01A	9121052-01A	9121052-01A	9121052-01A	9121052-01A	Bearing
20	9121053-01	9121053-01	9121053-01	9121053-01	9121053-01	9121053-01	Lip Seal
21	9051635-01	9051635-01	9051635-01	9051635-01	9051635-01	9051635-01	O-Ring
22	9051640-01	9051640-01	9051640-01	9051640-01	9051640-01	9051640-01	Water Shed
23	9051613-02	9051613-02	9051613-01	9051613-01	9051613-02	9051613-02	Insulation Collar
	-	-	-	-	9051884-01	9051884-01	Lower Insulation Collar (HEM)
24	-	-	9051638-01	9051638-01	-	-	Slotted Collar
25	-	-	9051637-01	9051637-01	-	-	O-Ring

KGEMDISP

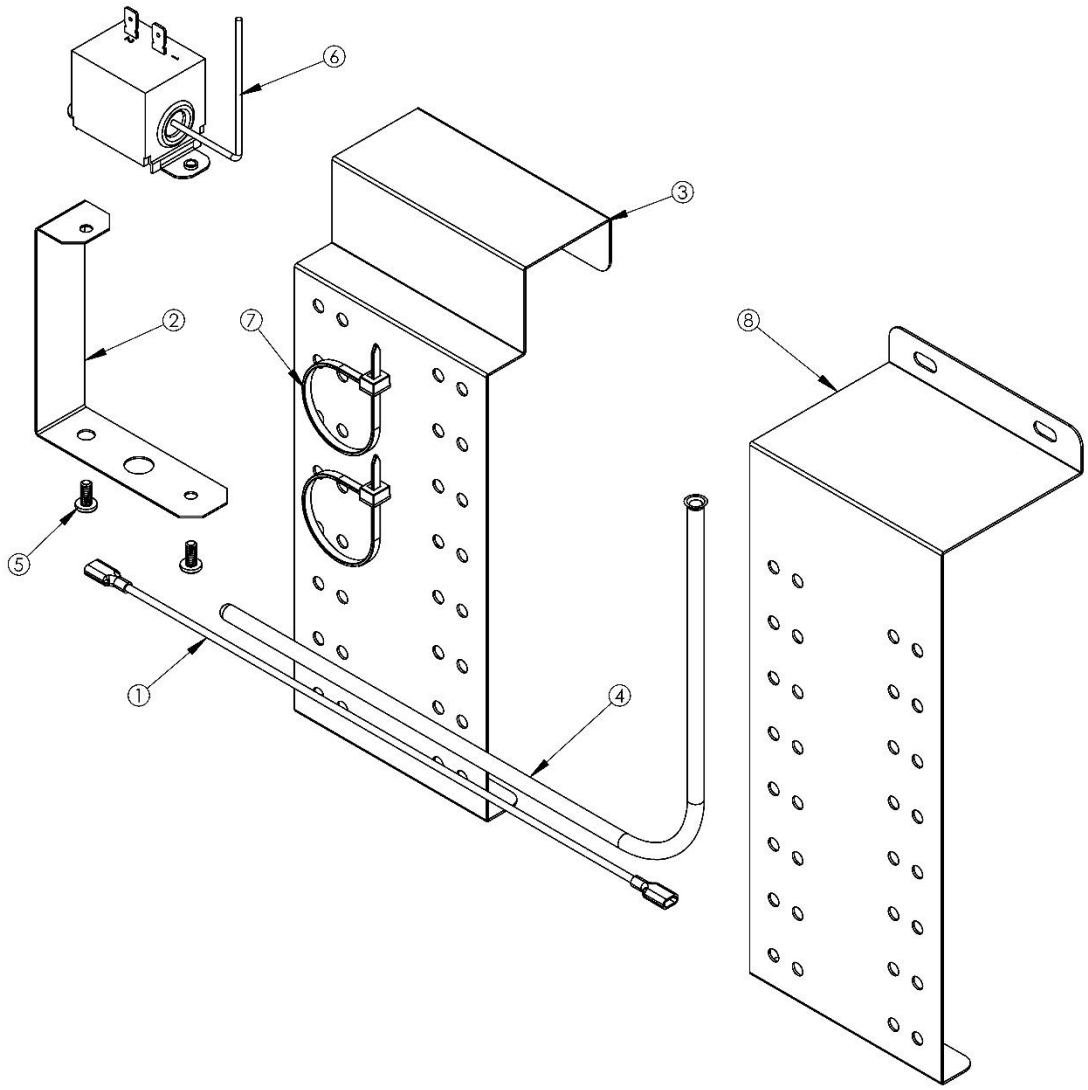

Item No.	Part Number	Desciption
1	2061032-52	KGEMFS Wire Assembly
2	3013510-01	KGEMFS Thermostat Bracket
3	3013572-01	Bin Thermostat Tube Bracket
4	3033768-01	Bin Thermostat Tube
5	9031008-02P	Bin Thermostat Screw
6	9041097-01	Bin Thermostat
7	9021021-12	Cable Tie
8	3013862-01	Alternate Bin Thermostat Bracket

Revision Date: 10/1/2026

11100 E. 45th Avenue • Denver, CO 80239 • Phone: 1.866.PURE.ICE • www.iceomatic.com